NREL
NATIONAL RENEWABLE ENERGY LABORATORY

The Energy Systems Integration Facility

Electrical Testing Capabilities and PHIL Research Activities – November 2015

Mariko Shirazi and Blake Lundstrom

Grid Simulator Testing of Energy Systems and Wind Turbine Powertrains 2015 Workshop, Florida State University Center for Advanced Power Systems

November 5, 2015

NREL is a national laboratory of the U.S. Department of Energy, Office of Energy Efficiency and Renewable Energy, operated by the Alliance for Sustainable Energy, LLC.

ESIF Laboratories

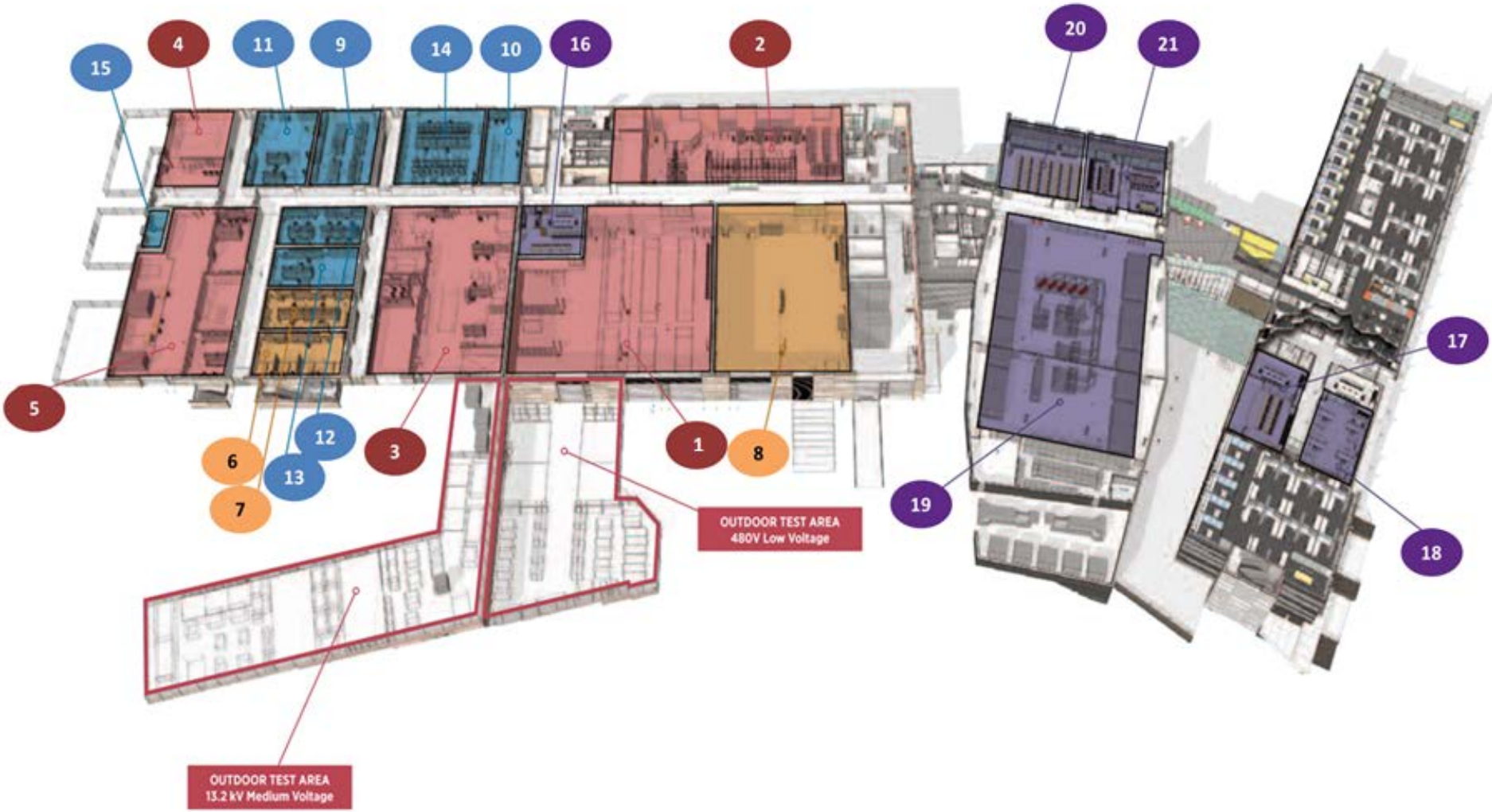

ESIF Laboratories

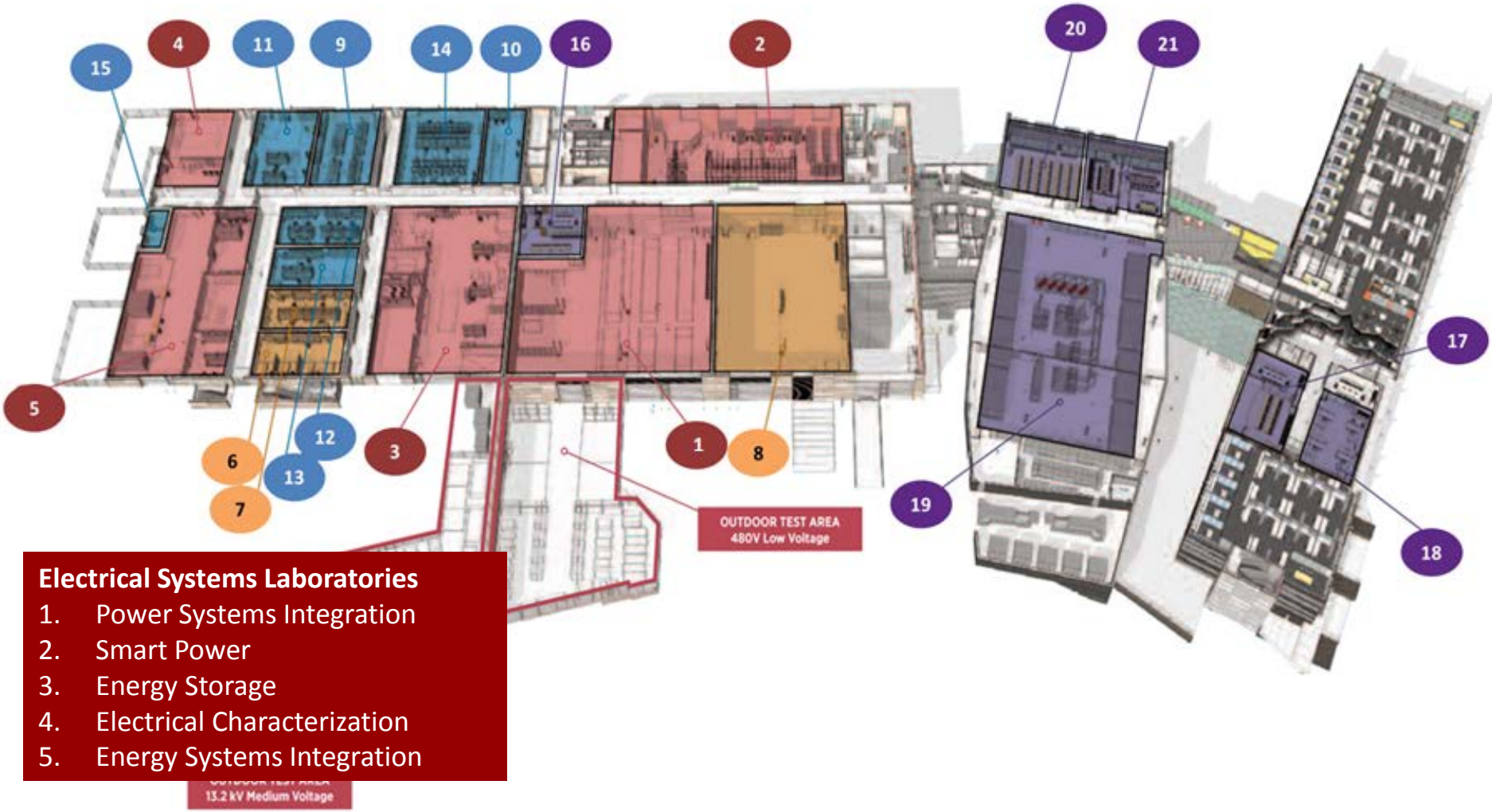

Electrical Systems Laboratories

1. Power Systems Integration
2. Smart Power
3. Energy Storage
4. Electrical Characterization
5. Energy Systems Integration

ESIF Laboratories

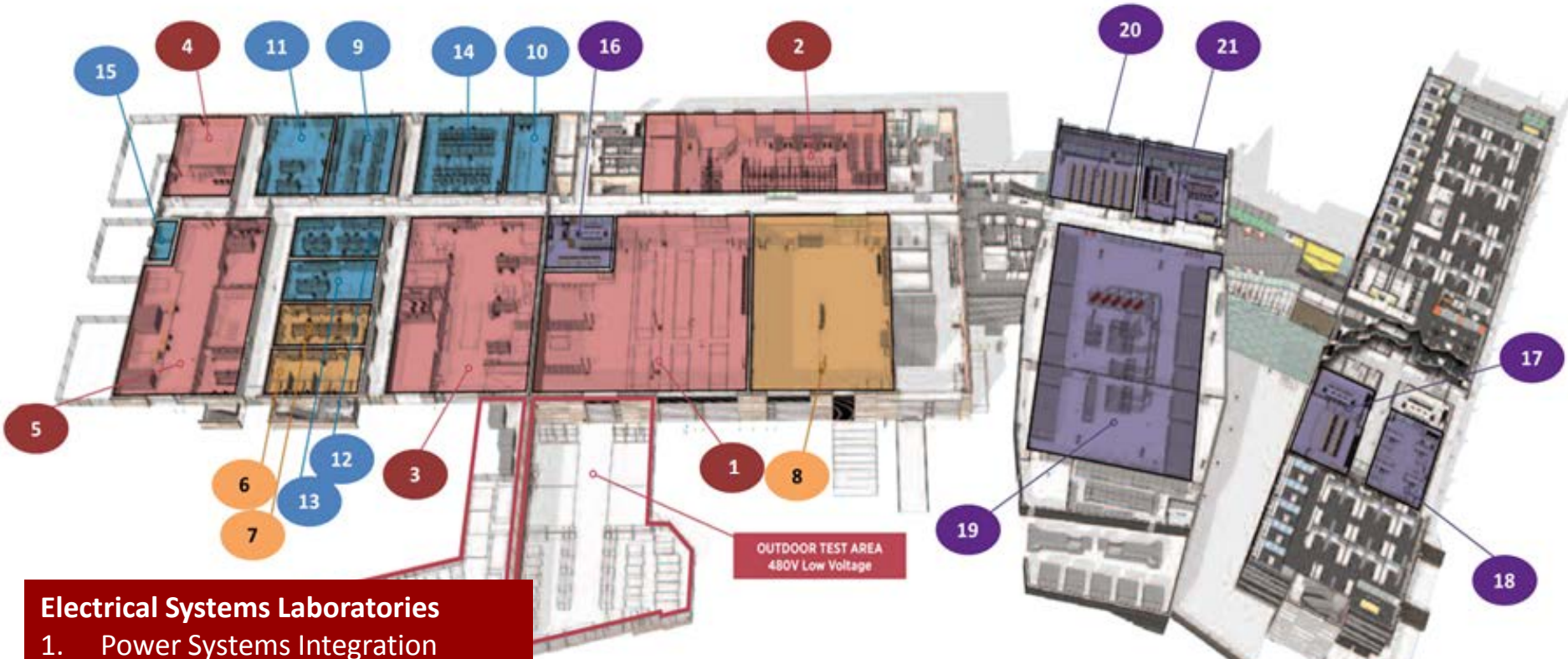

Electrical Systems Laboratories

1. Power Systems Integration
2. Smart Power
3. Energy Storage
4. Electrical Characterization
5. Energy Systems Integration

Thermal Systems Laboratories

6. Thermal Storage Process and Components
7. Thermal Storage Materials
8. Optical Characterization

ESIF Laboratories

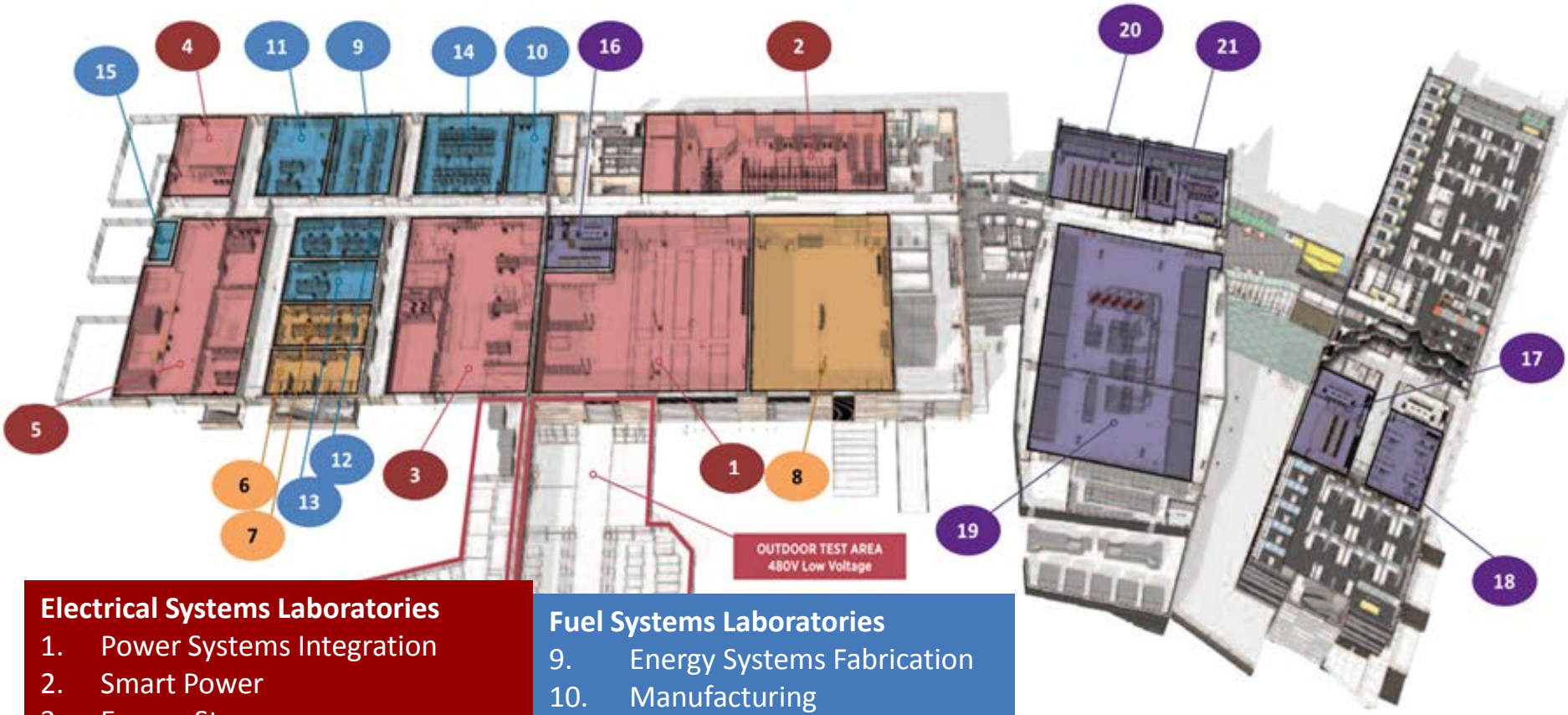

Electrical Systems Laboratories

1. Power Systems Integration
2. Smart Power
3. Energy Storage
4. Electrical Characterization
5. Energy Systems Integration

Thermal Systems Laboratories

6. Thermal Storage Process and Components
7. Thermal Storage Materials
8. Optical Characterization

Fuel Systems Laboratories

9. Energy Systems Fabrication
10. Manufacturing
11. Materials Characterization
12. Electrochemical Characterization
13. Energy Systems Sensor
14. Fuel Cell Development & Test
15. Energy Systems High Pressure Test

ESIF Laboratories

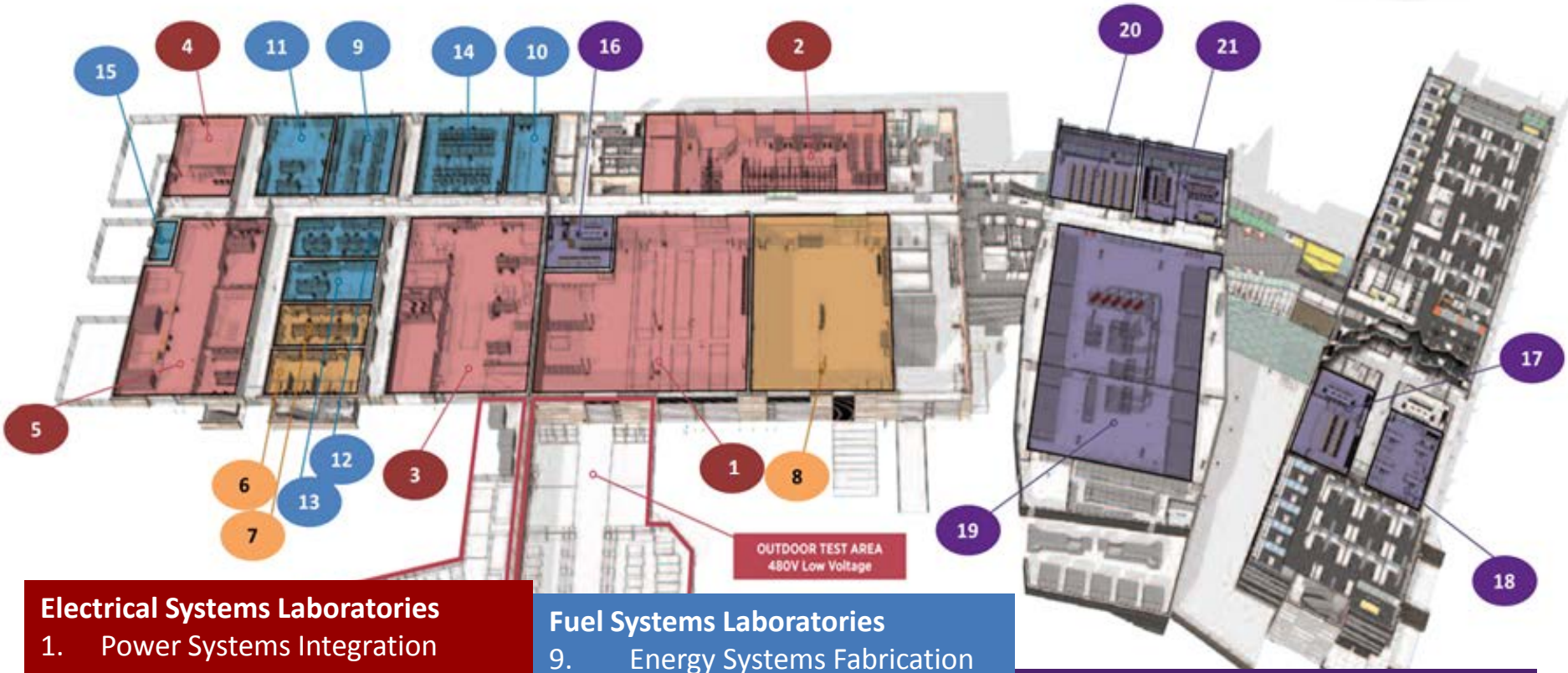

Electrical Systems Laboratories

1. Power Systems Integration
2. Smart Power
3. Energy Storage
4. Electrical Characterization
5. Energy Systems Integration

Thermal Systems Laboratories

6. Thermal Storage Process and Components
7. Thermal Storage Materials
8. Optical Characterization

Fuel Systems Laboratories

9. Energy Systems Fabrication
10. Manufacturing
11. Materials Characterization
12. Electrochemical Characterization
13. Energy Systems Sensor
14. Fuel Cell Development & Test
15. Energy Systems High Pressure Test

High Performance Computing, Data Analysis, and Visualization

16. ESIF Control Room
17. Energy Integration Visualization
18. Secure Data Center
19. High Performance Computing Data Center
20. Insight Center Visualization
21. Insight Center Collaboration

Research Electrical Distribution Bus (REDB)

AC

- 4-wire plus ground
- Floating or grounded neutral
- 600 Vac
- 16 Hz to 400 Hz
- 250A and 1600A installed
- 250A and 2500A planned (future)
- 4-pole switches
- Connects PSIL, SPL, ESL, GSE, LBE, LVOTA, MVOTA, ESIL

DC

- 3-wire plus ground
- Any pole may be grounded
- ±500Vdc or 1000Vdc
- 250A and 1600A installed
- 250A and 2500A planned (future)
- Experiment connection via cart contactor/fuse or direct (main lug only)
- Connects PSIL, SPL, ESL, PVE, LVOTA, MVOTA, ESIL

Example Racetrack and Lab Section

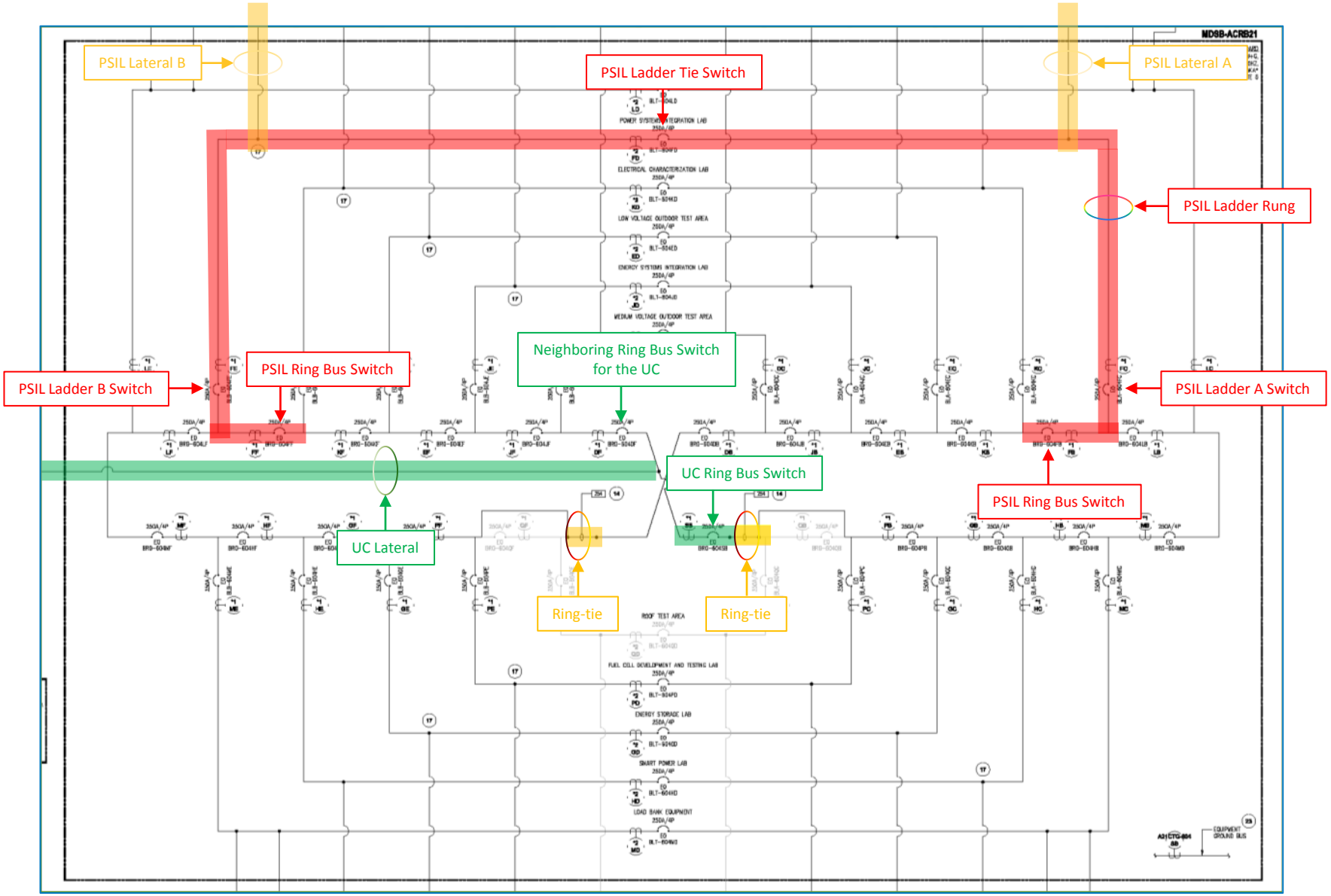

REDB Routing—Conceptual

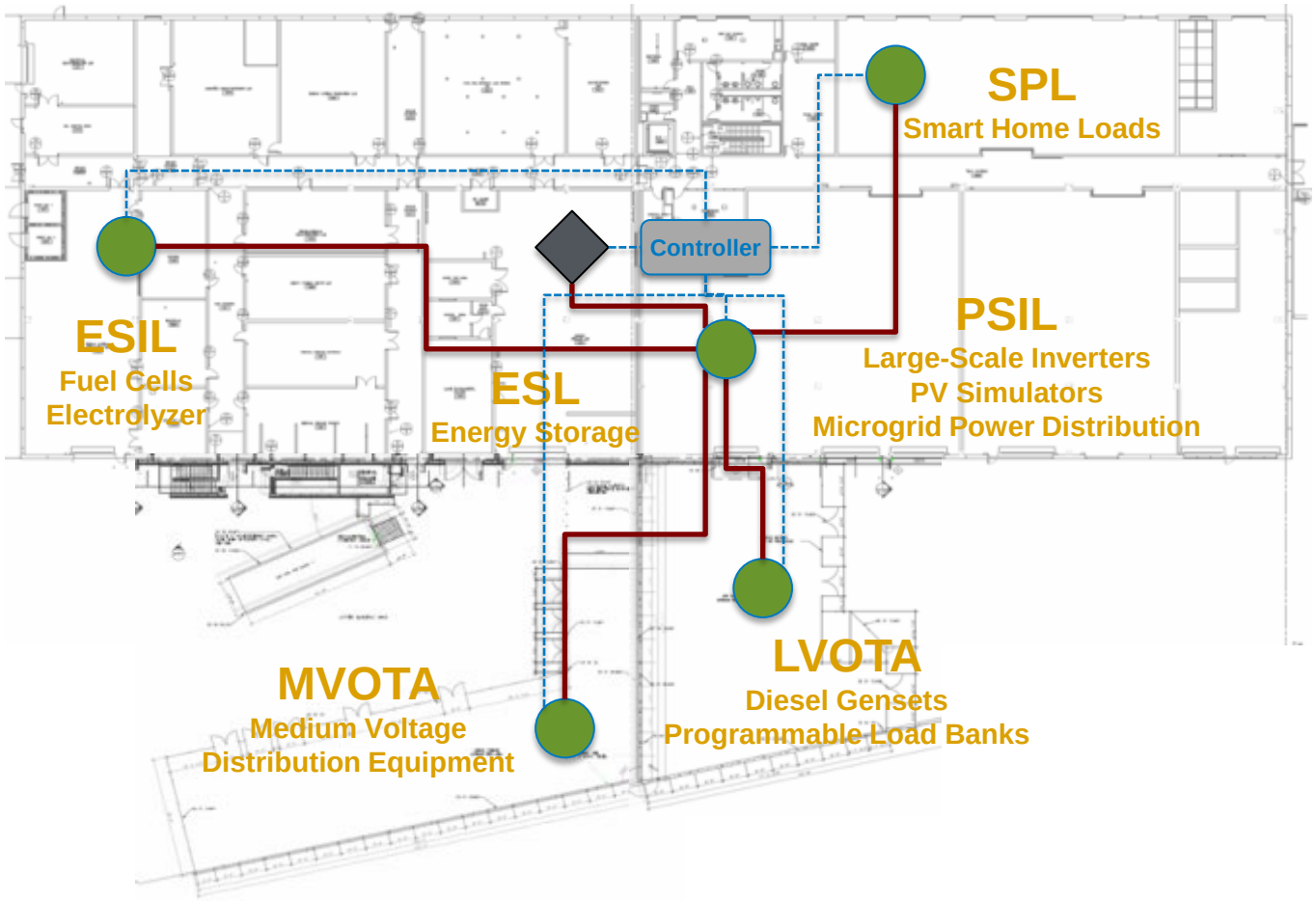

NREL
NATIONAL RENEWABLE ENERGY LABORATORY

Lab Equipment

1.08 MVA Grid Simulator (2.16 MVA)

Manufacturer and Base Model

Ametek RS90 (90 kVA)

Modularity

Four RS270 “quads” capable of independent or parallel operation

Basic Specifications (RS270)

- **Voltage:** 0–400 $V_{l\text{-}n}$ or 400 V_{dc}
- **Frequency:**
  - DC or 16–819 Hz (sourcing)
  - DC or 16–500 Hz (sinking)
- **Current:** 375 A (1500 A total)
- **Power Flow:** Bi-directional
- **Phase Control:** Independent phase control
- **PHIL Interface:** Analog input corresponding to instantaneous voltage waveform command
- **Input Current THD:**
  - Source mode: ~ 3%
  - Sink mode: ~ 5%
- **Software Interface:**
  - Transient list editor
  - Arbitrary waveform generation
- **Cooling:** Air-cooled

1.0 MVA Grid Simulator—More Specs

Architecture

- **Topology:** Three single-phase full-bridges
- **Device Type:** PFC = IGBT, Inverter = MOSFET
- **Inverter Switching Frequency:** 60 kHz, interleaved to 240 kHz effective

Output Specifications

- **Voltage Accuracy:** ±0.3 V AC, ±1 V DC
- **Frequency Accuracy:** ±0.01%
- **Phase Angle Accuracy:** < 1.5° @ 16–100 Hz; < 2° @100–500 Hz
- **THD at Full Load:**
  - Sourcing: < 0.5% @ 16–66 Hz; < 1% @ 66–500 Hz; < 1.25% up to 819 Hz
  - Sinking: < 1% @45–66 Hz; < 2% @ 66–500 Hz
- **Load Regulation:** 0.25% FS @ DC–100 Hz; 0.5% FS @ > 100 Hz
- **DC Offset Voltage:** < 20 mV
- **Slew Rate:** 200 µs for 20%–90% output change into resistive load, > 0.5 V/µs
- **Settling Time:** < 0.5 µs
- **-3dB Bandwidth:**

  2-3 kHz

1.5 MW PV Simulator

Manufacturer and Base Model

Magna-Power MTD1000-250 (250 kW)

Modularity

Six modules capable of independent, parallel, or series operation (up to 4000 V)

Basic Specifications

- **Voltage:** 25–1000 V (up to 4000 V)
- **Current:** 250 A (up to 1500 A)
- **Power Flow:** Supply only
- **PHIL Interface:** Analog input corresponding to instantaneous voltage/ current waveform command
- **Bandwidth:**
  - Voltage: 60 Hz
  - Current: 45 Hz
- **Slew Rate:**
  - Voltage: 4 ms for 0–63% step
  - Current: 8 ms for 0–63% step
- **Load Transient Response:** 10 ms to recover to within ± 1% of regulated output with a 50–100% or 100–50% load step
- **Load Regulation:**
  - Voltage: ±0.01% of full scale
  - Current: ±0.04% of full scale
- **Software Interface:**
  - PV IV curve emulation
  - Profile generation
- **Cooling:** Air-cooled

660 kW Battery/PV Simulator

Manufacturer and Base Model

Anderson Electric Controls AC2660P (660 kW)

Modularity

Currently one module; future two modules capable of independent, parallel, or series operation – Auction!

Basic Specifications

- **Voltage:** 264–1000 V (up to 2000 V)
- **Current:** 2500 A (up to 5000 A)
- **Power Flow:** Bi-directional
- **PHIL Interface:** Digital voltage, current, irradiance, and/or temperature commands
- **Load Regulation:**
  - Steady-state: ±0.5%
  - Transient: ±3%
- **Load Transient Response:**
  < 10 ms for 10–90% or 90–10% load step
- **Bandwidth:**
  - Voltage control: 180 Hz (Next Gen = 500 Hz)
  - Current control: 2.0 kHz (Next Gen = 2.5 kHz)
- **Software Interface:**
  - PV IV curve emulation
  - Battery emulation
  - Profile generation
- **Cooling:** Liquid-cooled

1.5 MVA Load Bank

Manufacturer and Base Model

LoadTec OSW4c 390 kW/kVAR$_L$/kVAR$_C$ RLC Load Banks

Modularity

Four modules can be operated independently or in parallel

Basic Specifications

- **Voltage:** 0–346 $V_{l\text{-}n}$/600 $V_{l\text{-}l}$
- **Frequency:**
  - L and C: 45–65 Hz
  - R: DC–400 Hz
- **Power:**
  - 390 kW/kVAR @ 346/600 V 3ϕ
  - 250 kW/kVAR @ 277/480 V 3ϕ
  - 47 kW/kVAR @ 120/208 V 3ϕ
  - 47 kW/kVAR @ 120 V 1ϕ
- **Resolution**
  - 234 W/VAR @ 346/600 V 3ϕ
  - 150 W/VAR @ 277/480 V 3ϕ
  - 28 W/VAR @ 120/208 V 3ϕ
  - 10 W/VAR @ 120 V 1ϕ
- **Phase Configuration:**
  - Balanced or unbalanced 3ϕ
  - Single-phase
  - Split-phase
- **PHIL Interface:** Digital kW/kVAR cmds
- **Software Interface:**
  - Load profile entry
- **Cooling:** Air-cooled

NREL
NATIONAL RENEWABLE ENERGY LABORATORY

Power Hardware-in-the-Loop (PHIL) Research at ESIF

Summary Block Diagram

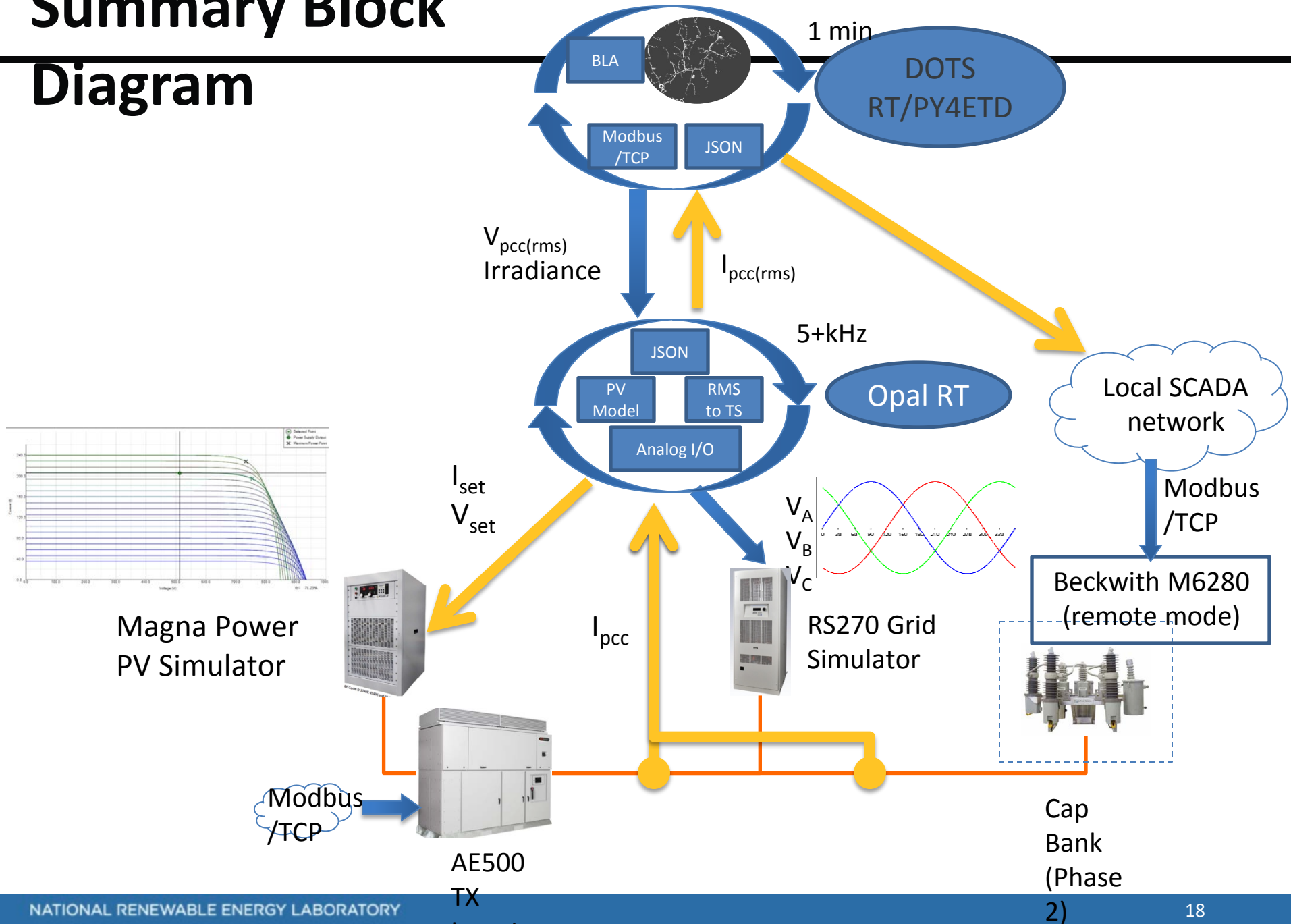

Smart Distribution Use Case

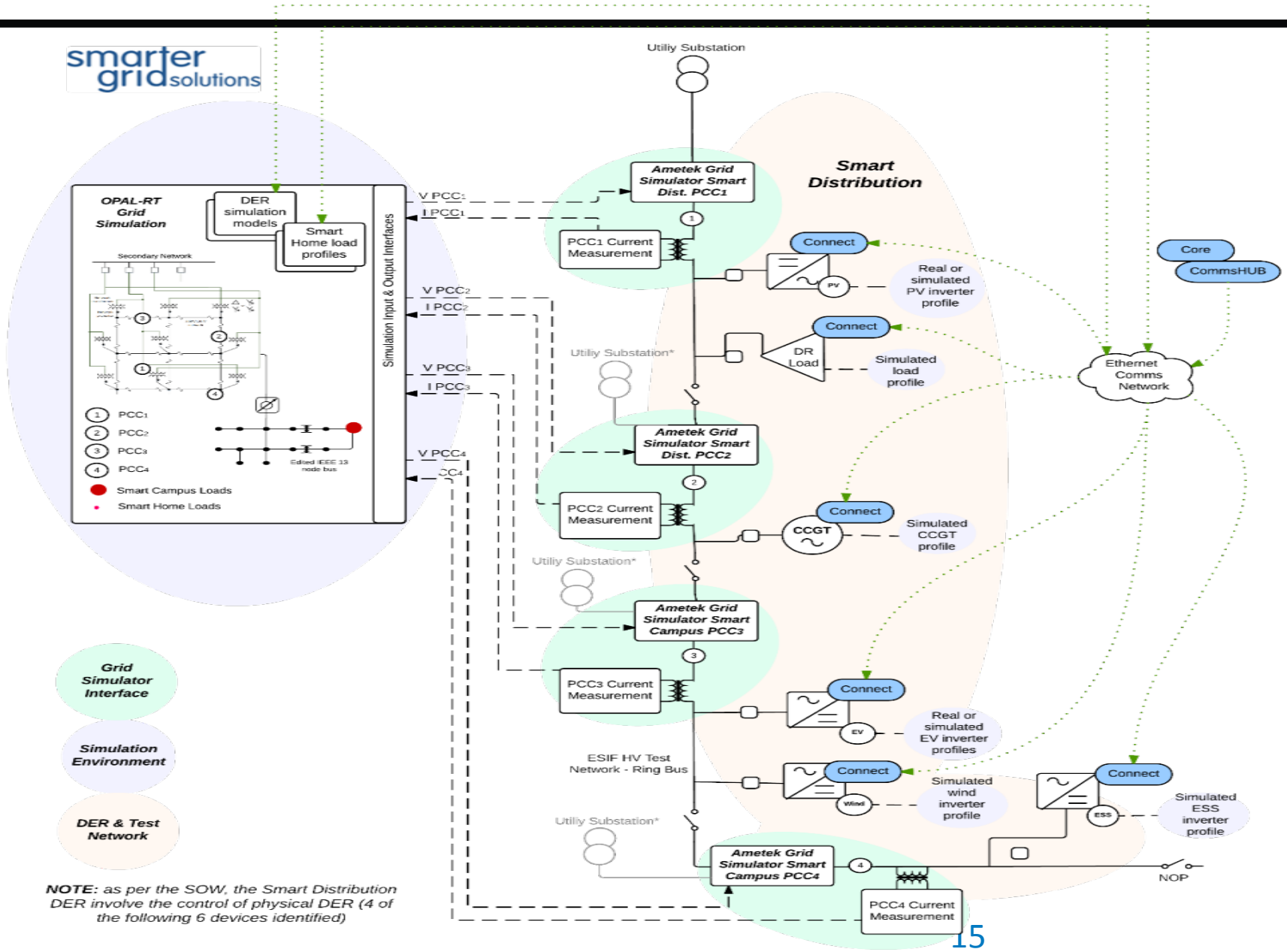

Remote PHIL and Co-simulation Test Bed

Combines actual hardware testing using PHIL with co-simulation of larger electric power grid using off-the-shelf modeling tools. Very flexible architecture enables multi-site testing (e.g. NREL links to PNNL and CSIRO), and scenario flexibility

Very Flexible:

- **Arbitrary Grid:** location, topology & equipment
  - Demo: IEEE 8500 and 123 with no hardware changes
- **Any scenario:** normal ops, faults, contingencies
  - Demo: Cloud transients, home thermal physics models
- **Actual hardware:** no proprietary models required
  - Demo: 2 advanced inverters at various points of common coupling
- **Multi-site:** hardware and/or simulation
  - Demo: PNNL (WA) link to NREL (CO)
  - CSIRO (Australia)

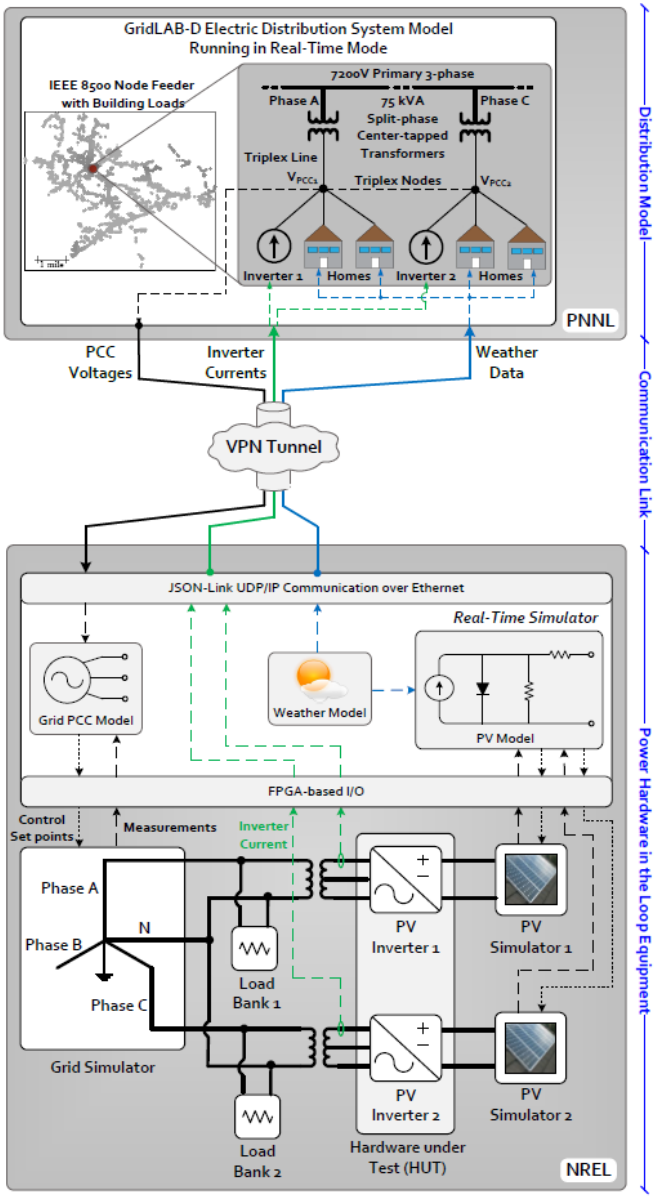

Multiple-PCC PHIL

System to be tested:

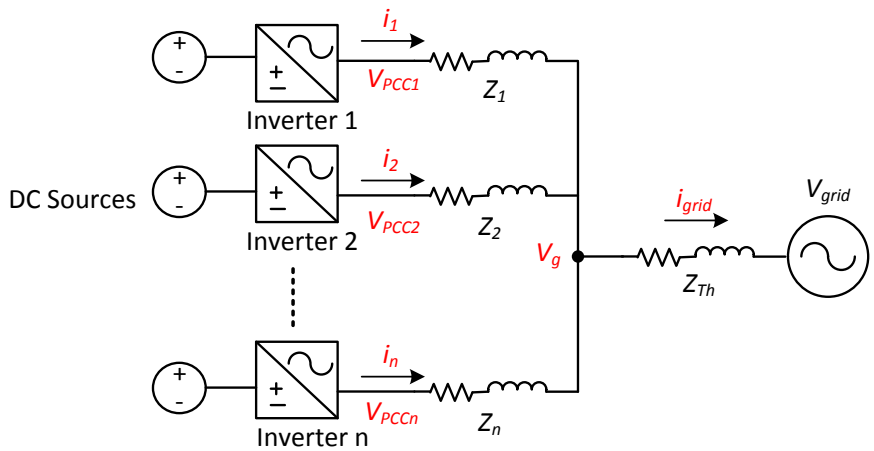

One possible PHIL test setup:

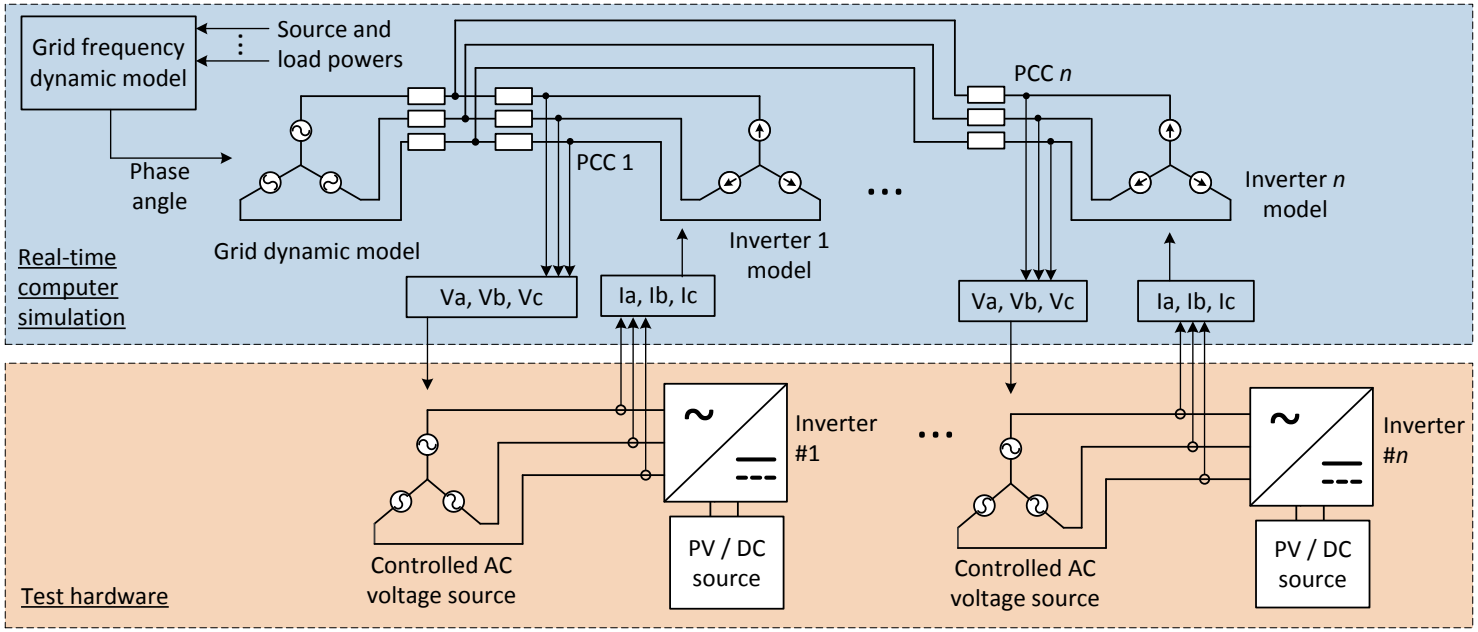

Multi-inverter, Multi-PCC Volt-VAr Test

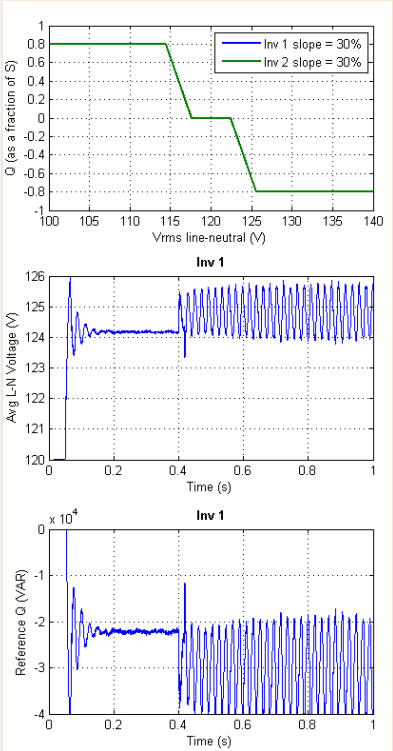

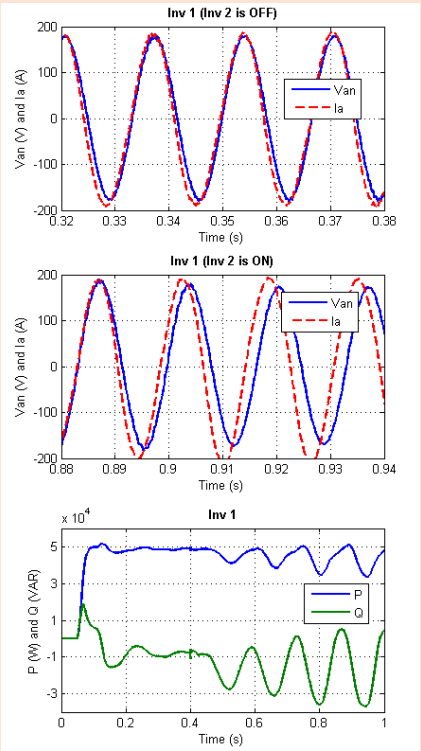

Reactive power cycling between two inverters with high Q(V) slope

Instability caused by slower volt-VAr response time

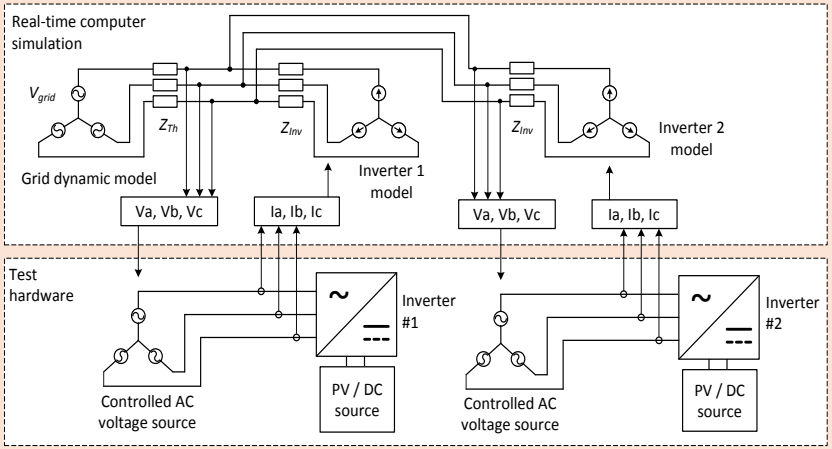

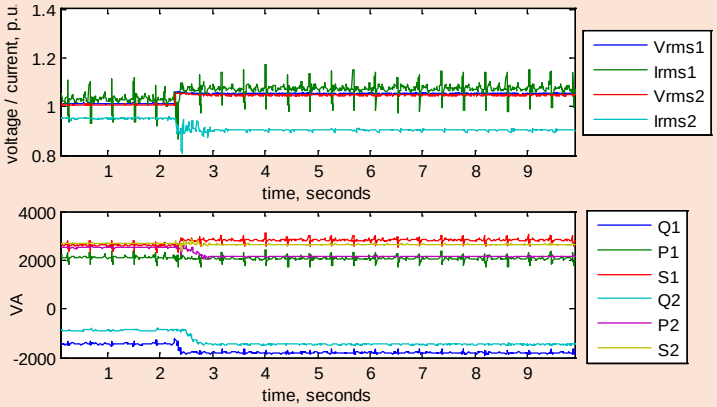

- Simulated impedance in loop with actual inverters – two different inverters from leading manufacturers
- Experimental validation with transient PHIL – no problems found in limited testing to date

PHIL Testing of DER Grid Support Functions

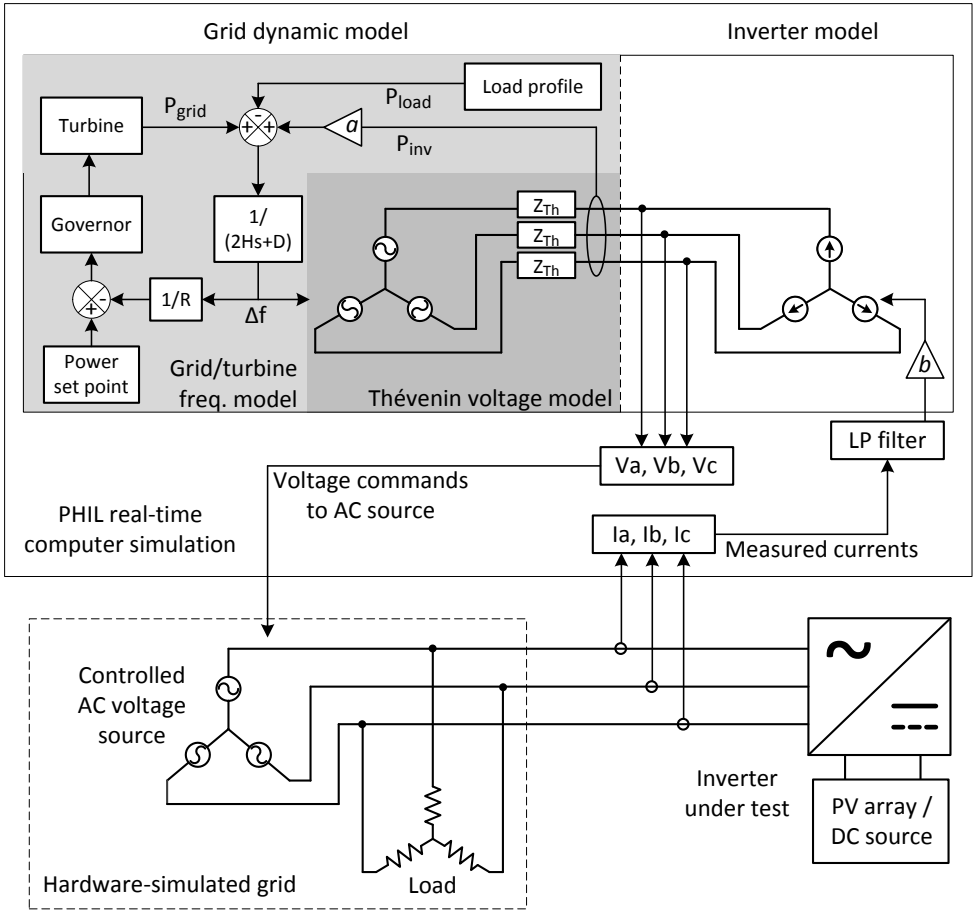

- Hardware testing of advanced inverter/DER features with grid voltage and frequency dynamics simulated using PHIL
- Can simulate multiple PCCs simultaneously

PHIL test emulating major grid frequency event, with commercial advanced inverter performing frequency ride-through:

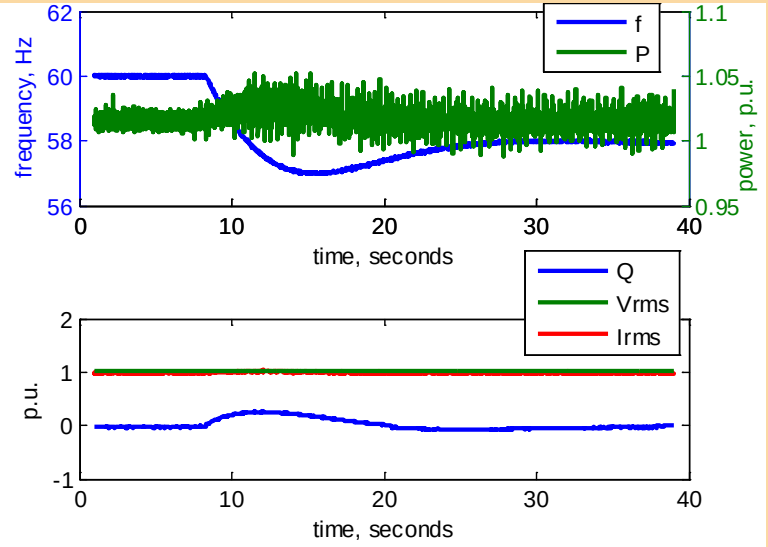

Distributed PV with Energy Storage

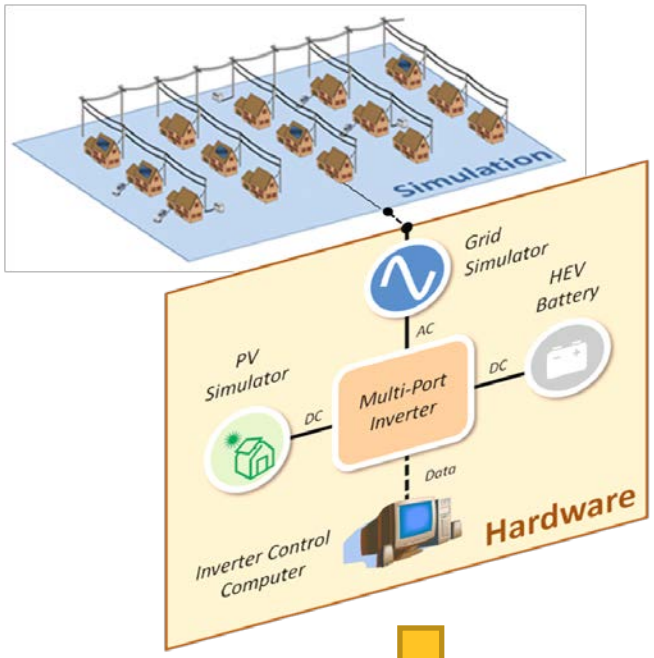

- **Simulation of high penetration of rooftop PV with battery storage on**
  - IEEE123 feeder in GridLAB-D
  - Historical residential commercial load profiles
  - Added control strategies to inverter model:
    - Local Volt-VAR, Inverter smoothing, Transformer smoothing, PV firming, PV curtailment

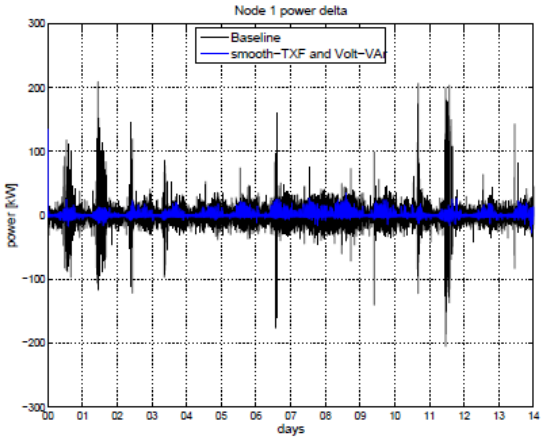

- **PHIL testing at ~10kW scale**
  - Replaced one inverter / PV / battery system in the simulation with hardware

PHIL-based Development and Validation for ESI

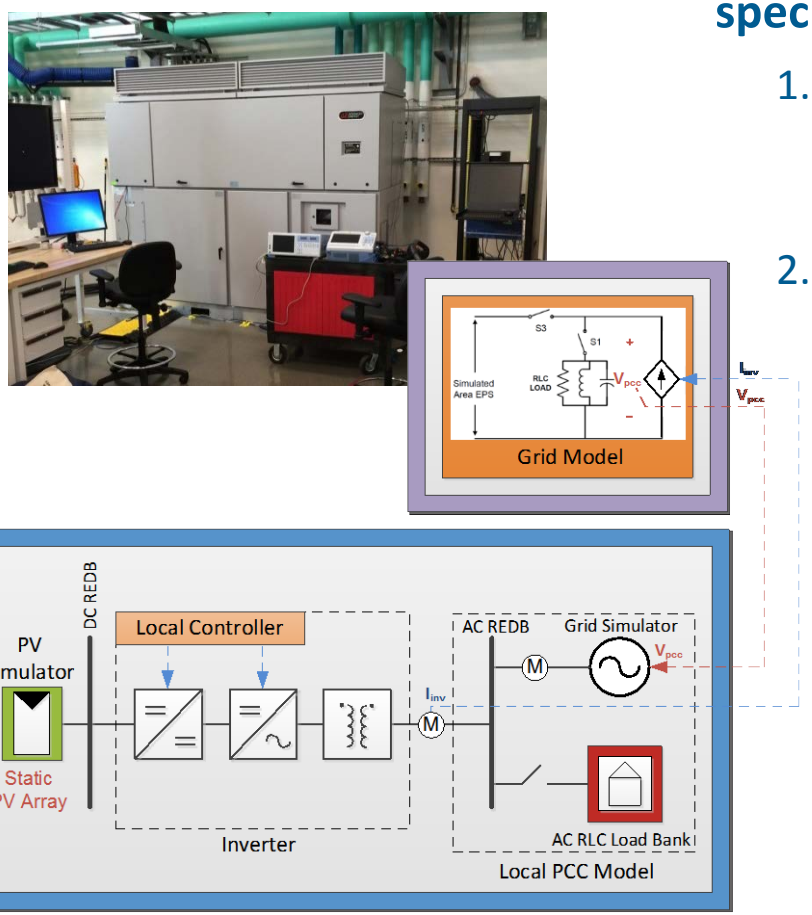

Use of PHIL techniques to evaluate novel energy system devices and control systems connected to specific network configurations involves:

1. Validation of PHIL simulation configuration for a known condition (e.g., field data or hardware) to ensure reliability of technique with particular hardware
2. PHIL simulation with updated devices, models, or control systems to prove new developments before field implementation